PART F-01 ~ F-19

DC SHORT BODY WITH EXTENDED SENSING DISTANCE PROXIMITY SWITCH

Diameter	ϕ6.5		ϕ8		M8	
● Shielded ○ non-Shielded	●	○	●	○	●	○
Switching Distance Sn mm	2 mm	4 mm	2 mm	4 mm	2 mm	4 mm
Housing Material	stainless steel		stainless steel		stainless steel	
● With LED ○ Without LED	●		●		●	
Dimensions (unit: mm)	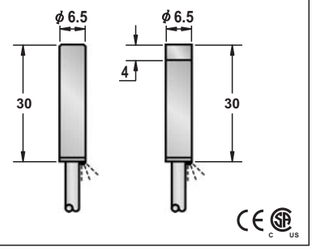		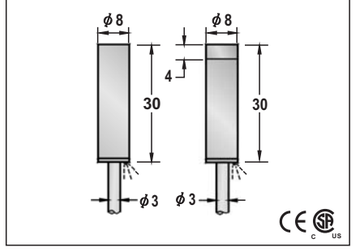		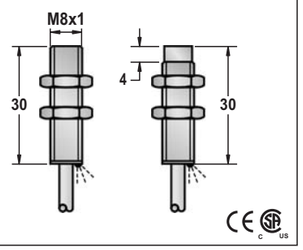	
Operating Voltage	10-30VDC		10-30VDC		10-30VDC	
Ripple	<10%		<10%		<10%	
No Load Current	<10mA		<10mA		<10mA	
Max. Load Current	200mA		200mA		200mA	
Leakge Current	<0.01mA		<0.01mA		<0.01mA	
Surge Current	-		-		-	
Min. Load Current	-		-		-	
Voltage Drop	<1.5V		<1.5V		<1.5V	
Switching Frequency	2KHZ	1KHZ	2KHZ	1KHZ	2KHZ	1KHZ
Response Time	0.1ms/0.1ms	0.2ms/0.2ms	0.1ms/0.1ms	0.2ms/0.2ms	0.1ms/0.1ms	0.2ms/0.2ms
Switching Hysteresis	<15%		<15%		<15%	
Repeat Accuracy	<1.0%(Sr)		<1.0%(Sr)		<1.0%(Sr)	
Protection Category	IP67		IP67		IP67	
Operating Temperature	-25 ℃ - +70 ℃		-25 ℃ - +70 ℃		-25 ℃ - +70 ℃	
Temperature Drift	<10%(Sr)		<10%(Sr)		<10%(Sr)	
Short Circuit Protection	YES		YES		YES	
Overload Trip Point	220mA		220mA		220mA	
Time Delay Before Availability	<10ms		<10ms		<10ms	
EMC	RFI>3V/m / EFT>1KV / ESD>4KV (contact)		RFI>3V/m / EFT>1KV / ESD>4KV (contact)		RFI>3V/m / EFT>1KV / ESD>4KV (contact)	
Shock / Vibration	IEC 60947-5-2,Part 7.4.1 / IEC 60947-5-2,Part 7.4.2		IEC 60947-5-2,Part 7.4.1 / IEC 60947-5-2,Part 7.4.2		IEC 60947-5-2,Part 7.4.1 / IEC 60947-5-2,Part 7.4.2	
Material Active Face	POM		POM		POM	
DC 3 wire 10-30V NPN N.O.	ECU1-D0602N-A3S2	1 ECU2-D0604N-A3S2	ECU1-D0802N-A3S2	1 ECU2-D0804N-A3S2	ECU1-0802N-A3S2	1 ECU2-0804N-A3S2
DC 3 wire 10-30V NPN N.C.	ECU1-D0602N-B3S2	2 ECU2-D0604N-B3S2	ECU1-D0802N-B3S2	2 ECU2-D0804N-B3S2	ECU1-0802N-B3S2	2 ECU2-0804N-B3S2
DC 3 wire 10-30V PNP N.O.	ECU1-D0602P-A3S2	3 ECU2-D0604P-A3S2	ECU1-D0802P-A3S2	3 ECU2-D0804P-A3S2	ECU1-0802P-A3S2	3 ECU2-0804P-A3S2
DC 3 wire 10-30V PNP N.C.	ECU1-D0602P-B3S2	4 ECU2-D0604P-B3S2	ECU1-D0802P-B3S2	4 ECU2-D0804P-B3S2	ECU1-0802P-B3S2	4 ECU2-0804P-B3S2
DC 4 wire 10-30V Changeover PNP (N.O. & N.C.)						
DC 4 wire 10-30V Changeover NPN (N.O. & N.C.)						
DC 2 wire 10-60V N.O.						
DC 2 wire 10-60V N.C.						
DC 3 wire 10-55v NPN N.O. or NAMUR						
DC 3 wire 10-55v NPN N.C.						
DC 3 wire 10-55v PNP N.O.						
DC 3 wire 10-55v PNP N.C.						
AC 2 wire 20-250V N.O.						
AC 2 wire 20-250V N.C.						
AC 2 wire 20-250V N.O. or N.C. Changeable						
AC/DC 2 wire 20-250V N.O.						
AC/DC 2 wire 20-250V N.C.						
AC/DC 2 wire 20-250V N.O. or N.C. Changeable						
Remark						
Cable 2M (PVC)	3ϕ3x0.15		3ϕ3x0.15		3ϕ3x0.15	
Weight	Approx.40 g		Approx.45 g		Approx.47 g	

DC SHORT BODY WITH EXTENDED SENSING DISTANCE PROXIMITY SWITCH

Q8	ϕ11		M12	
●	●	○	●	○
2 mm	4 mm	8 mm	4 mm	8 mm
die-cast	nickel plated brass		nickel plated brass	
●	●		●	

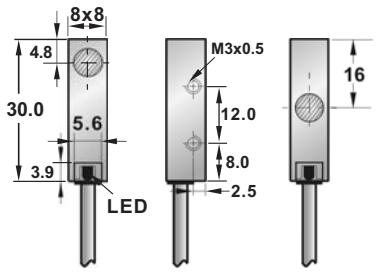

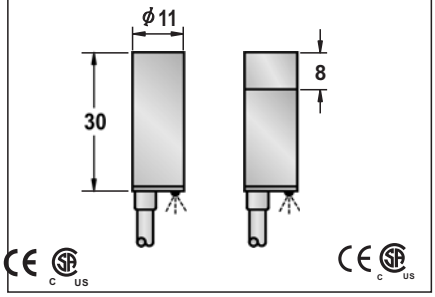

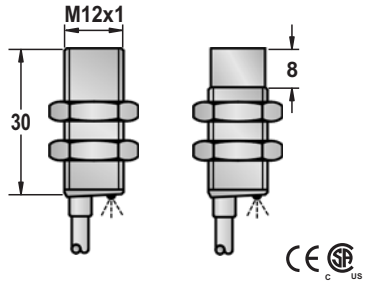

10-30VDC			10-30VDC			10-30VDC	
<10%			<10%			<10%	
<10mA			<10mA			<10mA	
200mA			200mA			200mA	
<0.01mA			<0.01mA			<0.01mA	
-			-			-	
-			-			-	
<1.5V			<1.5V			<1.5V	
2KHZ			1KHZ		500HZ	1KHZ	500HZ
0.1ms/0.1ms			0.2ms/0.2ms		0.5ms/0.5ms	0.2ms/0.2ms	0.5ms/0.5ms
<15%(Sr)			<15%			<15%	
<1.0%(Sr)			<1.0%(Sr)			<1.0%(Sr)	
IP67			IP67			IP67	
-25°C - +70°C			-25°C - +70°C			-25°C - +70°C	
<10%(Sr)			<10%(Sr)			<10%(Sr)	
YES			YES			YES	
220mA			220mA			220mA	
<10ms			<10ms			<10ms	
RFI>3V/m / EFT>1KV / ESD>4KV (contact)			RFI>3V/m / EFT>1KV / ESD>4KV (contact)			RFI>3V/m / EFT>1KV / ESD>4KV (contact)	
IEC 60947-5-2,Part 7.4.1 / IEC 60947-5-2,Part 7.4.2			IEC 60947-5-2,Part 7.4.1 / IEC 60947-5-2,Part 7.4.2			IEC 60947-5-2,Part 7.4.1 / IEC 60947-5-2,Part 7.4.2	
POM			POM			POM	PBT
EQM1-8802N-A3S2T	1	EQM1-8802N-A3S2M	ECM1-D1104N-A3S2	1	ECM2-D1108N-A3S2	ECM1-1204N-A3S2	1	ECM2-1208N-A3S2
EQM1-8802N-B3S2T	2	EQM1-8802N-B3S2M	ECM1-D1104N-B3S2	2	ECM2-D1108N-B3S2	ECM1-1204N-B3S2	2	ECM2-1208N-B3S2
EQM1-8802P-A3S2T	3	EQM1-8802P-A3S2M	ECM1-D1104P-A3S2	3	ECM2-D1108P-A3S2	ECM1-1204P-A3S2	3	ECM2-1208P-A3S2
EQM1-8802P-B3S2T	4	EQM1-8802P-B3S2M	ECM1-D1104P-B3S2	4	ECM2-D1108P-B3S2	ECM1-1204P-B3S2	4	ECM2-1208P-B3S2
			ECM1-D1104P-S4S2	6	ECM2-D1108P-S4S2	ECM1-1204P-S4S2	6	ECM2-1208P-S4S2
			ECM1-D1104N-S4S2	5	ECM2-D1108N-S4S2	ECM1-1204N-S4S2	5	ECM2-1208N-S4S2
			ECM1-D1104C-A2S2	7	ECM2-D1108C-A2S2	ECM1-1204C-A2S2	7	ECM2-1208C-A2S2
			ECM1-D1104C-B2S2	8	ECM2-D1108C-B2S2	ECM1-1204C-B2S2	8	ECM2-1208C-B2S2

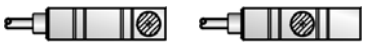

top sensing style　　center sensing style

Please see Page 18 for details and specifications of DC 2-Wire models on this page.

3.0ϕ3x0.15	4ϕ3x0.34	4ϕ3x0.34
Approx.38 g	Approx.58 g	Approx.62 g

DC SHORT BODY WITH EXTENDED SENSING DISTANCE PROXIMITY SWITCH

Q12	M18		M30	
●	●	○	●	○
4 mm	8 mm	16 mm	16 mm	25mm
die-cast	nickel plated brass		nickel plated brass	
●	●		●	

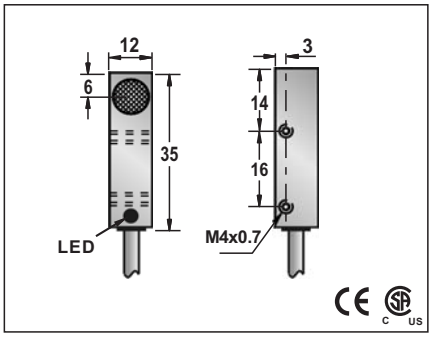

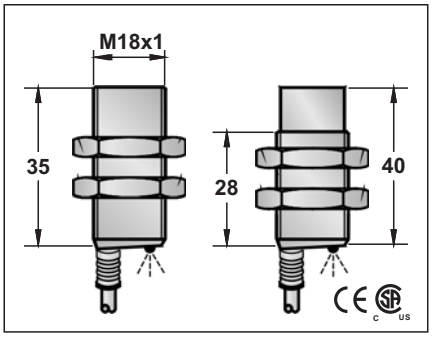

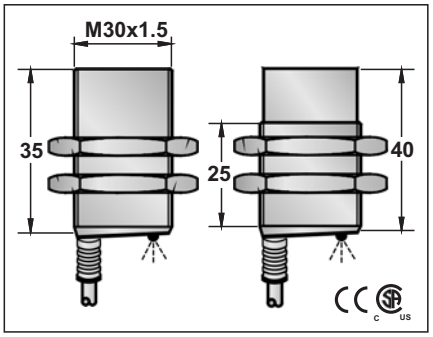

Q12	M18		M30	
10-30VDC	10-30VDC		10-30VDC	
<10%	<10%		<10%	
<10mA	<10mA		<10mA	
200mA	200mA		200mA	
<0.01mA	<0.01mA		<0.01mA	
-	-		-	
-	-		-	
<1.5V	<1.5V		<1.5V	
1KHZ	500HZ	500HZ	500HZ	500HZ
0.2ms/0.2ms	0.5ms/0.5ms	0.5ms/0.5ms	0.5ms/0.5ms	0.5ms/0.5ms
<15%(Sr)	<15%		<15%	
<1.0%(Sr)	<1.0%(Sr)		<1.0%(Sr)	
IP67	IP67		IP67	
-25°C - +70°C	-25°C - +70°C		-25°C - +70°C	
<10%(Sr)	<10%(Sr)		<10%(Sr)	
YES	YES		YES	
220mA	220mA		220mA	
<10ms	<10ms		<10ms	
RFI>3V/m / EFT>1KV / ESD>4KV (contact)	RFI>3V/m / EFT>1KV / ESD>4KV (contact)		RFI>3V/m / EFT>1KV / ESD>4KV (contact)	
IEC 60947-5-2,Part 7.4.1 / IEC 60947-5-2,Part 7.4.2	IEC 60947-5-2,Part 7.4.1 / IEC 60947-5-2,Part 7.4.2		IEC 60947-5-2,Part 7.4.1 / IEC 60947-5-2,Part 7.4.2	
POM	PBT		PBT	
EQM1-1204N-A3S2T 1	ECM1-1808N-A3S2 1	ECM2-1816N-A3S2	ECM1-3016N-A3S2 1	ECM2-3025N-A3S2
EQM1-1204N-B3S2T 2	ECM1-1808N-B3S2 2	ECM2-1816N-B3S2	ECM1-3016N-B3S2 2	ECM2-3025N-B3S2
EQM1-1204P-A3S2T 3	ECM1-1808P-A3S2 3	ECM2-1816P-A3S2	ECM1-3016P-A3S2 3	ECM2-3025P-A3S2
EQM1-1204P-B3S2T 4	ECM1-1808P-B3S2 4	ECM2-1816P-B3S2	ECM1-3016P-B3S2 4	ECM2-3025P-B3S2
~~EQM1-1204P-S4S2T~~ 6	ECM1-1808P-S4S2 6	ECM2-1816P-S4S2	ECM1-3016P-S4S2 6	ECM2-3025P-S4S2
~~EQM1-1204N-S4S2T~~ 5	ECM1-1808N-S4S2 5	ECM2-1816N-S4S2	ECM1-3016N-S4S2 5	ECM2-3025N-S4S2
	ECM1-1808C-A2S2 7	ECM2-1816C-A2S2	ECM1-3016C-A2S2 7	ECM2-3025C-A2S2
	ECM1-1808C-B2S2 8	ECM2-1816C-B2S2	ECM1-3016C-B2S2 8	ECM2-3025C-B2S2
	Please see Page 18 for details and specifications of DC 2-Wire models on this page.			
4ϕ3X0.34	5.0ϕ44x0.1		4ϕ3x0.34	
Approx.75 g	Approx.132 g		Approx.180 g	

Note:
Coming Soon : Part numbers with underline
In Preparation: Part numbers with a line through the middle